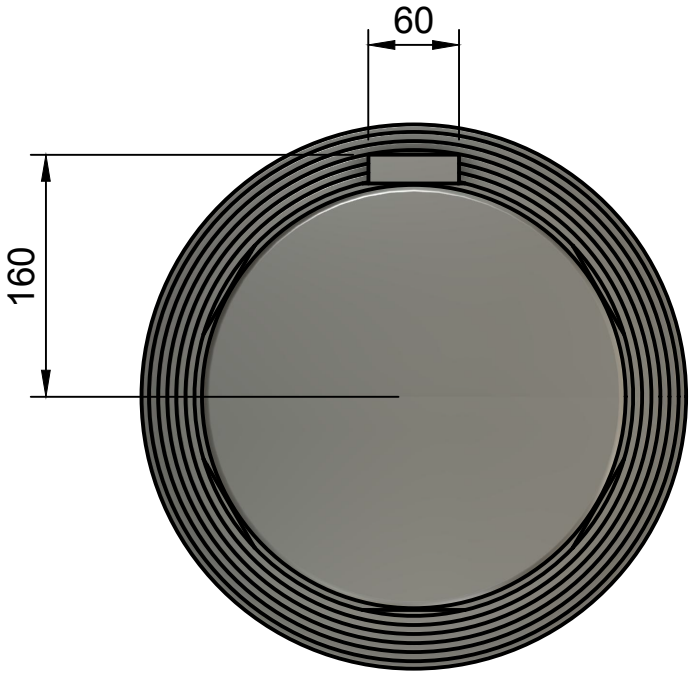

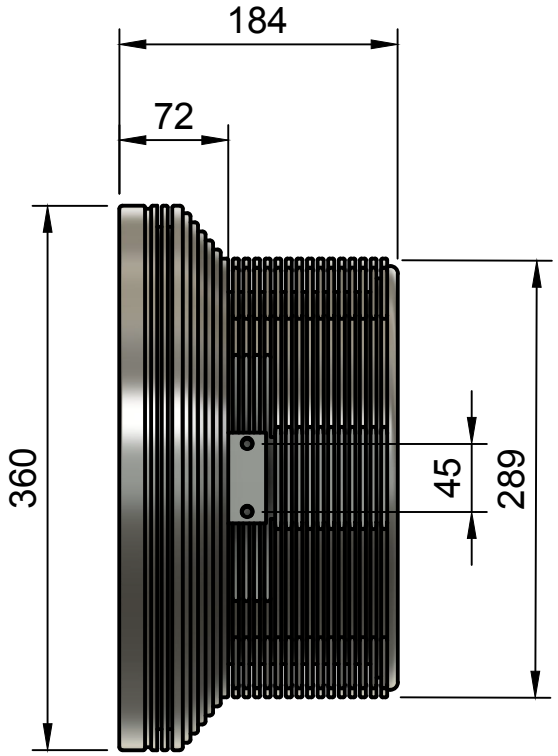

LEDITPROGRESS
INNOVATION LED TECHNOLOGY